Replacement Parts

Keep this manual for ordering replacement parts

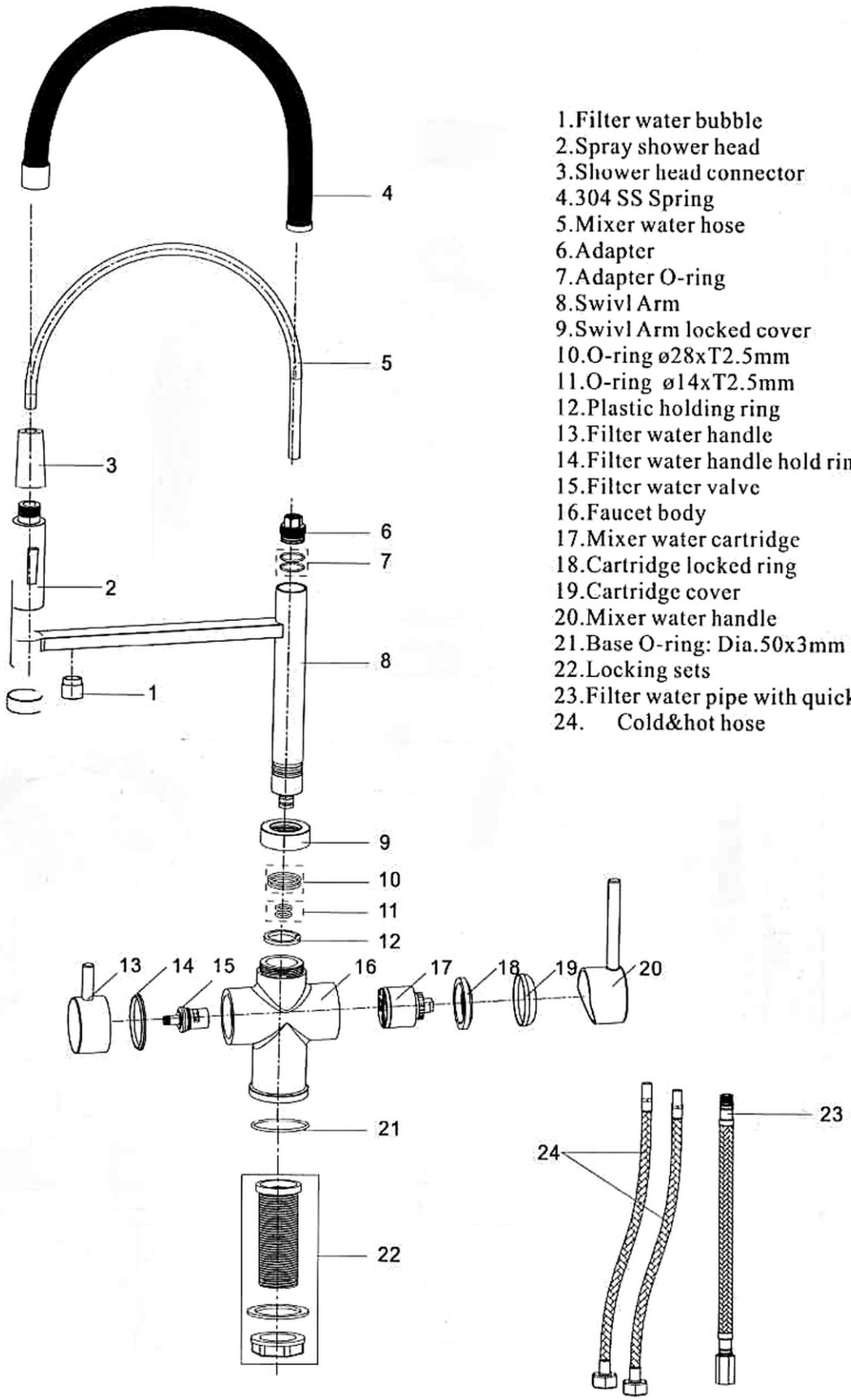

1.Filter water bubble
2.Spray shower head
3.Shower head connector
4.304 SS Spring
5.Mixer water hose
6.Adapter
7.Adapter O-ring
8.Swivl Arm
9.Swivl Arm locked cover
10.O-ring ø28xT2.5mm
11.O-ring ø14xT2.5mm
12.Plastic holding ring
13.Filter water handle
14.Filter water handle hold ring
15.Filter water valve
16.Faucet body
17.Mixer water cartridge
18.Cartridge locked ring
19.Cartridge cover
20.Mixer water handle
21.Base O-ring: Dia.50x3mm
22.Locking sets
23.Filter water pipe with quick adapter
24. Cold&hot hose